DEVELON

SIAM SUN AUTOSALES

DEVELON

DX140W

- Operating Weight 14,050 kg
- Bucket Capacity 0.6 m^3
- Rated Power 132 HP / 2,200 rpm

Siam Sun Autosales CO.,LTD.
99 Song Khanong Subdistrict Sam Phran District, Nakhon Pathom Province 73210
sales.admin@siamsunautosales.com
Tel. +66 81 378 5151
www.siamsunautosales.com

Develon XGMA by Siam Sun
siamsun.autosales
Develon XGMA by Siam Sun
@siamsun

@siamsun

DX140W

SPECIFICATION

Description	Unit	
Operating Weight	kg	14,450
Bucket Capacity	m^3	0.6
Boom Length	mm	4,300
Arm Length	mm	2,100

Engine	Unit	
Model	-	DEVELON DL06A
Engine Type	-	Tier 3, Intercooler, Water-cooled, Compatible with B10 and B20 biodiesel
Rated power	kW / rpm	130 / 2,000
Max. torque	kg.m / rpm	55 / 1,400
Max. Tractive Effort	kg	7,700
No. of Cylinders & Stroke	-	6 Cylinders, 4-Stroke
Displacement	cc	5,890
Fuel Tank Capacity	Liter	280
Hydraulic Tank Capacity	Liter	102
Bucket Digging Force	kgf	10,140

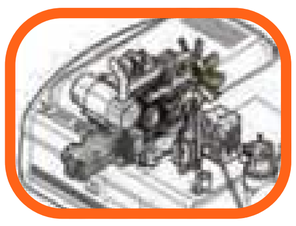

Hydraulic System

EPOS™ (Electronic Power Optimizing System)

The EPOS™ is the core component for controlling the hydraulic system and engine from the control cab, ensuring synchronized operation for optimal performance and fuel efficiency. The EPOS™ connects to the engine control unit via a data transfer link to harmonize engine and hydraulic operations.

Hydraulic Operation Modes

• The hydraulic system can operate both independently and in combined modes.
• Drive system and Auto boost mode function in both high-speed and high-traction power modes.

Cross-Sensing Pump System

• The Cross-sensing Pump system synchronizes hydraulic pumps to increase operating speed and improve fuel efficiency.
• Automatic deceleration system provides smooth start-stop operations and reduces shock loads.

Work Modes & Circuit Control

• 3 Working Modes (Power, Standard, Eco) to suit different job site requirements.
• Auxiliary circuit control buttons for attachment installation, regulating pump power output via a computerized system.

DIMENSIONS&WORKING RANGES

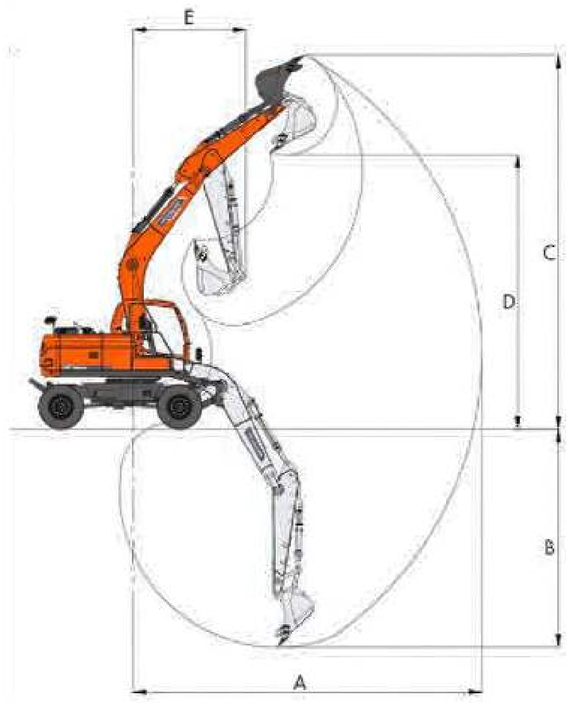

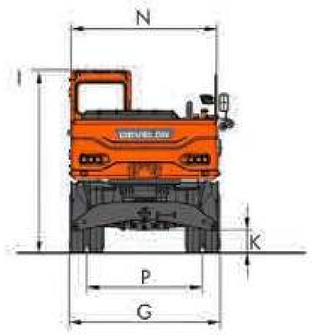

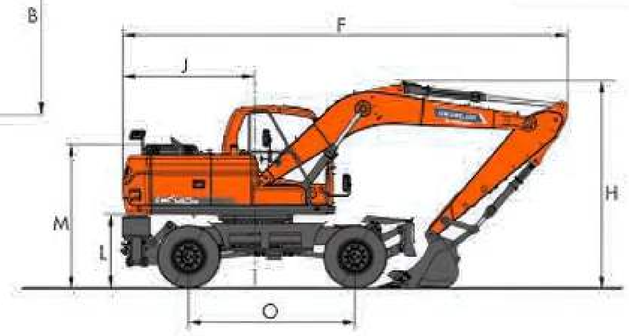

Working range	Unit	
A. Max. Digging Reach	mm	7,520
B. Max. Digging Depth	mm	4,580
C. Max. Digging Height	mm	8,130
D. Max. Dumping Height	mm	5,810
E. Min. Swing Radius	mm	2,470
F. Overall Length	mm	7,235
G. Overall Width	mm	2,496
H. Boom Height from Ground	mm	3,351
I. Cab Height	mm	3,040
J. Tail Swing Radius	mm	2,200
K. Ground Clearance	mm	305
L. Upperstructure Ground Clearance	mm	1,206
M. Engine Hood Height	mm	2,376
N. Upperstructure Width	mm	2,494
O. Wheel Base	mm	2,800
P. Wheel Width	mm	1,944
Turning Radius	mm	6,900
Dual Tire Size 10.00-20 14PR		

Swing System

High-Torque Swing System

High-torque swing system features a piston motor and planetary reduction gear, oil-lubricated. The internal swing gear is induction-hardened for superior durability and equipped with high-shear load bearings. Features a highly efficient braking system that delivers smooth acceleration and swing response, even on slopes or under heavy-duty operations.

CONTACT US

Siam Sun Autosales CO.,LTD.
99 Song Khanong Subdistrict Sam Phran District,
Nakhon Pathom Province 73210
sales.admin@siamsunautosales.com
Tel. +66 81 378 5151
www.siamsunautosales.com

LINE
@siamsun